20854-120-277V 4-lamp T5HO High Bay (Eco-Bay)

NICOR Shining Brighter™

Project	Comments
Catalog #	**Prepared By**
Type	**Date**

Print Reset

FEATURES

Linear fluorescent high-bay for high-mounting height industrial or retail applications. Multi-lamp ballast design provides uniform illumination and dependable light output. T5/HO lamp/ballast system provides programmed start as well as high CRI and various chromatic lamp choices.

- 20 gauge steel housing with durable powder coat finish to resist corrosion.
- Open design improves thermal operation and ballast life.
- Apertured reflector provides up-light component and removes heat.
- Die-formed aluminum (G320) reflector designed for maximum 86% reflectivity. Secured to housing with fasteners.
- Class P, 60Hz high-power factor ballasts. Ballast factor of 1.0
- Universal 120-277V ballast.
- Includes IDEAL® PowerPlug™ which complies with NEC 410.73(G) and CEC 30-308(4) requirements during ballast disconnect for maintenance safety and reduced service disruption.
- Pressure-lock lamp holders for secure lamp installation.
- Includes heavy-gauge chain mounting kit.
- Lamps not included.

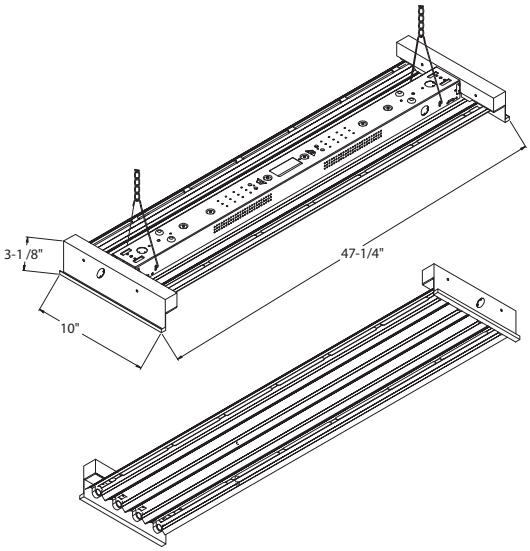

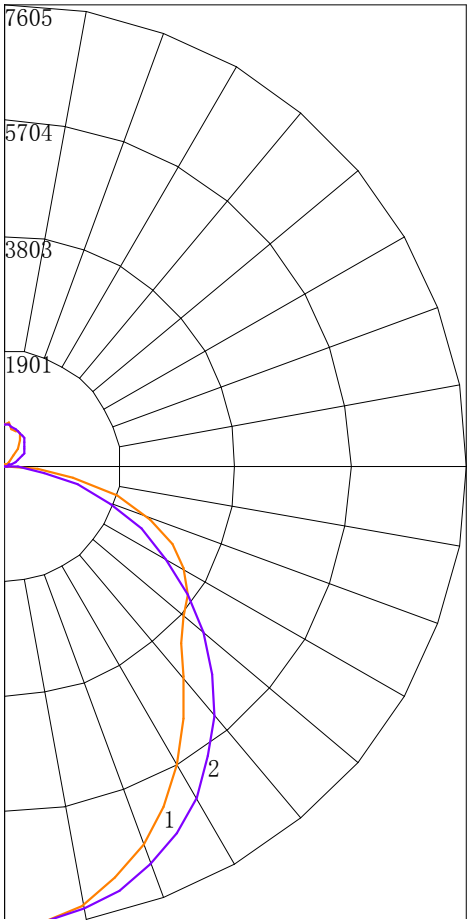

Also Available

20854-120-277V-4100K (includes lamps)

Options

Occupancy Sensor
Wire Guard
6' power cord and plug
4100K

Zonal Lumen Summary

Zone	Lumens	%Lamp	%Fixt
0-30	4864.76	27.9	32.5
0-40	7370.4	42.3	49.2
0-60	11712.06	67.2	78.1
0-90	14440.85	82.9	96.3

Luminance Data

Angle In Degrees	Average 0- Deg	Average 45-Deg	Average 90-Deg
45	20120	11900	11479
55	18495	10924	11638
65	16218	10967	11900
75	12247	10681	11424
85	5751	8890	8495

Polar Graph

Max. Candela = 7286.06 Located at Horizontal Angle = 0, Vertical Angle = 0
#1 - Vertical Plane through Horizontal Angles (90-270)
#2 - Vertical Plane through Horizontal Angles (0-180)

© 2010 NICOR, Inc. Specifications subject to change without notice. Rev-9/10